SOFT MAGNETIC COMPOSITES USED IN TRANSVERSE FLUX MACHINES

SZABÓ Loránd – Ioan-Adrian VIOREL– Vasile IANCU – Dan-Cristian POPA
Technical University of Cluj
400750 Cluj, P.O. Box 358, Romania
e-mail: Lorand.Szabo@mae.utcluj.ro

Abstract: In recent decades several special electrical machines had been presented in the literature and were tested in laboratories in order to satisfy several special requirements imposed by industry, transportation, etc. The transverse flux motor (TFM) is one of these new motor types. Due to its three-dimensional flux path its iron core cannot be manufactured using the classical steel laminations, but Soft Magnetic Composites (SMC) must be used. SMC are composed of surface-insulated iron powder particles, which are compacted to form uniform isotropic components with complex shapes. The use of these new materials now makes innovative electrical machine designs viable. In this paper the main properties of SMC will be discussed, and a TFM having SMC made iron core will be presented.

1. INTRODUCTION

Most conventional electrical machines are longitudinal flux machines. For example in Fig. 1a a section of a synchronous machine with permanent magnets on the rotor in a linear arrangement is presented. As it can be seen from the figure the currents through the stator coils are oriented in an axial direction. The flux lines follow a two dimensional pattern in planes perpendicular to the machine shaft. There are few exceptions, as axial flux machines, but these are usually disc type machines.

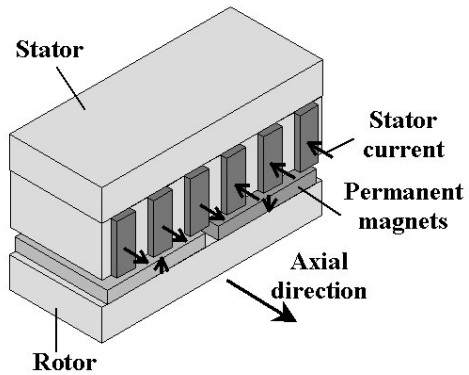

a) a section of a synchronous machine

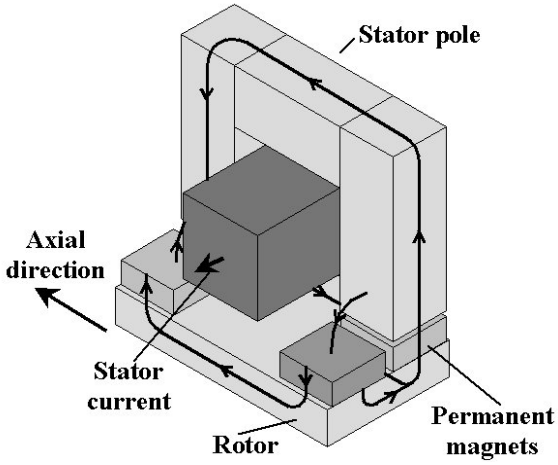

b) a section of a phase of TF machine

Fig. 1. Basic concept of conventional and TF machine

In contrast the transverse flux machines (TFM) have a true three-dimensional (3D) magnetic field pattern, as the flux lines

depicted in Fig. 1b show. In this case the current through the coil is oriented parallel to the rotation direction [1].

These machines having three-dimensional flux pattern cannot be built up of the widely used steel laminations, because their iron cores should be strongly unisotropic.

In this paper an overlook on the possible iron core materials for electrical machines will be made. The new soft magnetic powder composites (SMC) will be presented more detailed as a new alternative to steel laminations for iron core manufacturing. To exemplify the use of SMC a TFM topology will be presented.

2. IRON CORE MATERIALS FOR ELECTRICAL MACHINES

Generally the iron cores of electrical machines used in the low frequency domain do not necessarily require high frequency properties. Excepting some high speed machines and motors with many poles, which are used in a frequency range up to a few kHz. In the case of conventional motors (depending of course of the speed and of the structure of their tooth flank) the maximum frequency is about 400 Hz. The main priority for these machines is on high magnetic flux density and high permeability, plus mechanical strength at low frequency. Therefore for the guidance of the magnetic flux in electrical machines generally soft-magnetic steel sheets are used.

Hysteresis and eddy current losses occur in the iron cores of the electrical machines. These losses can lead to inadmissible heating and to unwanted field displacements due to the opposing flux produced which works against the main field flux.

The dependence of specific hysteresis and eddy current losses on the frequency (f) and the maximum flux density (B_{max}) for a thin steel sheet are given by:

$$p_h = c_h \cdot f \cdot B_{\max}^2 ;\ p_w = c_w \cdot f^2 \cdot B_{\max}^2 \quad (1)$$

The values of the hysteresis and eddy current losses constants, c_h and respectively c_w are material dependent. A square dependence of the peak value of the flux density shows up with both loss categories. The dependence of losses to the frequency is likewise squarely in the case of the eddy currents losses, and linear for the hysteresis ones.

In order to reduce the eddy current losses two possibilities exist. Very small sheet thickness is used and the sheets are isolated against each other in order to interrupt the eddy current lines. This increases the manufacturing costs, and reduces magnetically effective cross section of the iron core. Adding silicon (up to 3%) can lower the electrical conductivity of the iron core material and reduce the saturation polarization.

Laminated steel has high magnetic flux density and high permeability. But its uses are limited for reasons including the fall in its magnetic flux density in the high frequency and its high magnetic noise. The production of steel laminations is typically based upon traditional punching technology, which has a number of disadvantages: it wastes material (i.e. the pieces removed and lost) and it introduces mechanical strain into the laminations, which reduces their performances. Another disadvantage of the steel sheets is that in principle with them one cannot build a three-dimensional magnetically active cross section. Further high eddy current losses in the steel sheets arise caused by the alternating fields perpendicularly on the steel sheets. The flux path reluctance in the iron core is increased also due to the existing air-gaps between core steel sheets.

In the last decades several advances have been made to improve the performances of the laminated steels. For example by removing the impurities within the steel, such as carbon and sulphur, the electrical losses have been reduced. But there is limited scope for further improvements in the electrical performance without increasing cost, or decreasing the mechanical properties [2].

Therefore it seemed useful to look for alternative materials and processes to

construct the iron core of the electrical machines. One of the possible solutions are the soft magnetic powder composite materials (SMC).

As it was stated out above the magnetic circuit of the transverse flux machines exhibits generally a complex structure, and the magnetic flux circulates in three-dimensional paths within the machine. Therefore such new types of iron core materials are indispensably requested for the TFM [1].

3. SOFT MAGNETIC POWDER COMPOSITES

The soft magnetic powder composite materials (SMC) are based on isotropic iron powder particles (see Fig. 2) surrounded by an electrical insulating film coating.

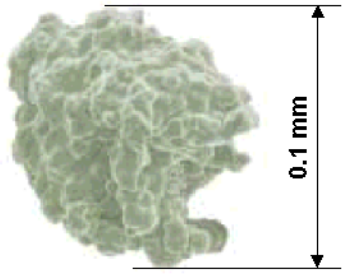

Fig. 2. Iron powder granule

SMC components are normally manufactured by conventional powder metallurgical (P/M) process, followed by a heat-treatment (sintering) at relatively low temperature. The SMC based parts achieve their geometry from the compacting operation, and their strength from the sintering operation. The schematic view of the SMC is given in Fig. 3.

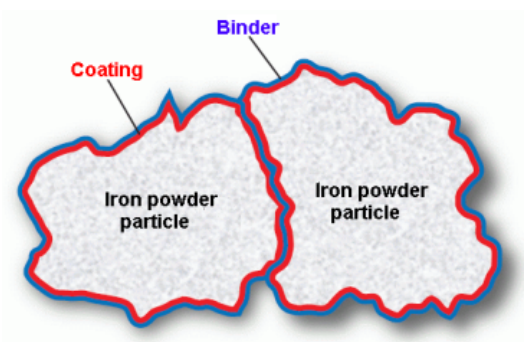

Fig. 3. Schematic view of SMC

SMC represents a new material in electrical machine engineering. With a powder rather than a sheet as the starting point for the iron core, different production techniques come into play.

The powdered metallurgy industry and its techniques have expanded dramatically over the last 20 years. Powdered components are widely used, e.g. in automobiles within the engine, transmission, steering, braking and suspension systems.

Although these components have not been used for electromagnetic applications the benefits of their production methods can be now used also for these purposes.

With powdered iron the principle of eddy current reduction is similar to that of the steel laminations, i.e. to reduce the area through which the magnetic flux passes. With powdered iron this area is reduced to that of a single grain, which is insulated from all of its neighbouring grains. It is the development in the insulation system that has lead to the breakthrough in powdered iron.

In previous attempts to utilise powdered iron the insulation thickness was significant compared to the grain size, this gave poor material properties. Now that the thickness can be controlled and made much thinner, the finished material has between 93.5 and 97.4 % iron, giving the material better electrical and mechanical performance [2].

The company behind much of the developments in SMC technology is Höganäs AB from Sweden. By using high compaction pressures they significantly increased both permeability and saturation of the composite materials.

The Somaloy™ product family is the ground on which most of the SMC components for electrical machine applications are based.

Each Somaloy grade is available as a press ready mix, which is customised for the specific application and the relevant motor environment, such as operating temperature interval. The best and the most widely used composite materials available at the market in this field are Somaloy 500 and 550 [3].

The cores made of such materials for various motors used in the low frequency range are required to have low core loss and as high as possible flux density saturation, permeability, and strength.

During the production of the SMC iron powder with additives of isolation and bonding agents (as for example organic synthetic resins or silicone resins) are pressed together into a desired form. This happens under very high pressure of up to 800 MPa, in order to achieve a density of the material as high as possible. The quantity of the added bonding agent is approximately 0.5 to 5%. The individual iron particles receive a coat, which ensures them electrically isolation against each other, and mechanical connections with sufficient firmness by the production process. Both these properties can be fulfilled naturally only up to a certain degree. The material is brittle and therefore sensitive to the mechanical application of forces.

Within conventional powder metallurgy processing after compaction the parts are then sintered. Sintering is a high temperature heat treatment, which develops the bonds between the powder particles and enhances its mechanical performance. However, with SMC powders sintering is not possible because the temperatures involved would cause the insulation coating to break down and giving poor electrical performance, as the particles would bond metallically to each other. Only a limited amount of heat treatment can be carried out on SMC in order to remove (to burn) of any lubricant included within the powder mix and to stress relieve the compact. For Somaloy 500 the heat treatment is typically 500 °C for 30 minutes, compared to 1120÷1150 °C for 15 to 60 minutes for non insulated iron powders [2].

The magnetic characteristics of SMC compared with laminated steel sheets are rather bad. In Fig. 4a the magnetisation curve of a good quality 0.35 mm thick steel lamination and one of the best SMC materials available at the market (Somaloy 500) are presented.

The SMC has both the saturation field density and the relative permeability for small field intensity values clearly under the values of the steel sheet. This must be considered during the design of the magnetic circuit. The maximum relative permeability of the composite material arises to about μ_r=500 [1].

The electrical conductivity of Somaloy 500 is determined crucially by the kind and the quantity of the additives. The composition with an additive of 0.5% Kenolube exhibits the best magnetic characteristics and therefore is the best suitable for electrical machines. The electrical conductivity of this composition is for instance around 1000 times smaller than that of the pure iron, but only 200 times smaller than the conductivity of steel with a silicon content of 3%.

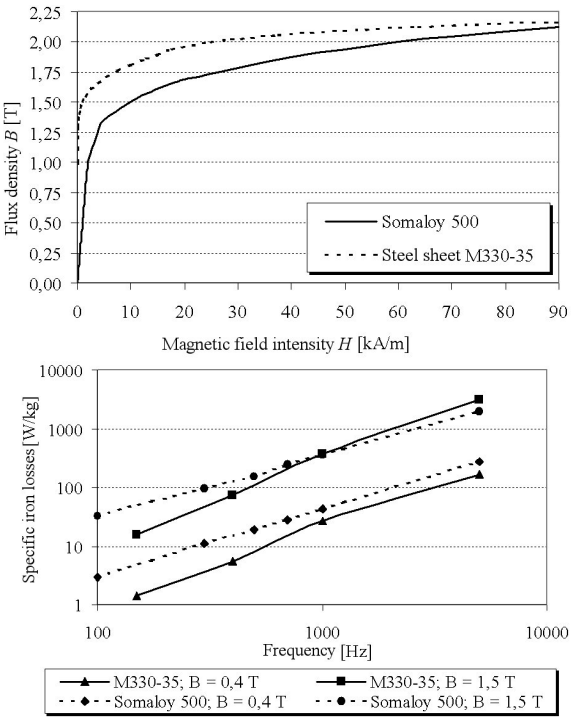

a) Magnetising curves

Fig. 4. Magnetic characteristics of SOMALOY 500 and of steel sheet

The eddy current losses are relatively small according to the small electrical conductivity, and this advantage arises in particular also in the case of three-dimensional alternating fields. The hysteresis losses are higher with the SMC, particularly for small frequencies,

in comparison to the iron sheet. This is caused by the handicap of the free movement of the domain walls by the additionally inserted material surfaces.

In Fig. 4b the specific core losses of the two materials already specified for flux densities of B=0.4 T and B=1.5 T are plotted function of frequency. At small frequencies SMC has clearly higher core losses due to its high hysteresis losses. At high flux density values and high frequencies the advantages of the composite material show up due to the significant smaller eddy current losses [1].

The SMC materials have lower mechanical properties that of steel lamination due to their manufacturing process (see Table I.).

Table I. Mechanical properties of SMC and steel lamination [2]

Properties	Somaloy 500	Transil lamination steel (grade 315)
Density [kg/m^3]	7360	7650
Modulus of elasticity [GPa]	92	200
Tensile strength [Mpa]	18	500
Thermal conductivity [W/m ^{0}C]	18	45 (in the plane of the lamination) 15 (axially, between laminations)

Thermal conductivity in powdered iron is isotropic, unlike with laminations, which has a much lower value in the axial direction compared to the radial direction. With laminated stators the hottest regions are at the ends of the stator stack, where the heat from the end winding is conducted axially into the stator laminations, then radial through the lamination to the outer casing.

Using the isotropic thermal conductivity of the powdered iron, the heat transfer of the losses in the windings to the outer case will be improved.

The advantages of the soft magnetic powder composite materials from the point of the view of their applications in electrical machines are [4]:

- Their 3D isotropic properties permit complex three-dimensional magnetic flux paths within the machines. This allows for many new topologies for machines that could not be attempted with 2D laminations. This way the designers are free to build electrical machines to suit its application, instead of restricting the application to the limitations of the motor. So new dimensions of performance and profitability for the electrical machines industry are opened up.
- The heat transfer in electrical machines having SMC iron cores will often be superior, taking into account that also the thermal properties are 3D isotropic.
- The eddy current loss is much lower than that in laminated steels, especially at higher frequencies, and the hysteresis loss becomes the dominant. This property may allow electrical machines to operate at higher frequencies, resulting in reduced machine size and weight [5].
- The flexibility of the powder metallurgy shaping process allows efficient production of complex shaped parts. The unique shaping opportunities open the way to smaller motors with cost advantages gained from lower winding volume, a higher fill factor and built-in assembly features.
- As manufacturing material wastage is minimal (nearly 100% raw material utilisation can be achieved), reduced material costs can be achieved.
- Due to their good dimensional accuracy (tight tolerance) and smooth surface finish there is no need of extra final machining operations. The different core sections can be combined and fitted together with no unwanted magnetic effects and special insulation requirements. These give a high

production rate, which reduces the overall production costs.

- The solid rather than a stack iron core give superior mechanical integrity.
- The electrical machines made of SMC cores are easily recyclable because the coil can be separated easily from the iron core.

Beside these advantages the use of SMC permit new design and production concepts. For example using SMC it is possible to co-compact together the core and coils (pressing coils with powder). Minimising the part numbers the manufacturing costs can be reduced. Generally it is recommended as to apply new designs rather to simply replace the laminated components [4]. The net shape, tight tolerance and smooth surface finish of a SMC pressing invite the designers to break up of the iron core to improve the winding and assembly. They are several options to choose: circumferentially divide the iron core into individual teeth segments, separate teeth and core back, separate teeth and slotted core back, or to connect the teeth at the tooth tips with a separate core back [2].

On the other hand SMC materials have also some disadvantages when compared with steel laminations. They have poor permeability (maximum 500 compared that of steel sheets greater than 2000) because the material has less than full density, and low saturation (circa 1.8 T compared to 2.2 T of steel laminations). Its relatively high hysteresis loss results from its strain and poor domain structure. SMC materials have low mechanical strength (as low as 20 MPa in tension) and they are brittle. It is a practical limits on the maximum aspect ratio of the shapes which can be pressed (3:1 to 6:1). The violation of the maximum aspect ratio produces reduced density in the component and complicates ejection of the compact from the die.

The SMC component costs are higher than laminated equivalents (powder costs typically 15-30% of total cost). The costs per component can force designers towards less components/motor. Increased volumes and large-scale production in combination with experience build up can force to costs to fall. At the moment more expensive iron parts can be offset by reduced copper, magnet, production costs and total product advantages.

Due to these drawbacks, it is obvious that simply replacing the existing laminated iron core with a SMC core will result in a loss of performance with very small compensating benefits. To fully take the advantages of the SMC material and overcome its disadvantages, a great amount of research work is required on a better understanding of the material properties, novel motor topologies combined with appropriate production techniques, advanced field analysis and design optimisation, and suitable drive techniques [5].

SMC can be applied for several electrical machine constructions [4, 6]. Beside TFM other axial flux motors (e.g. claw pole motors, etc.) can be of real opportunity for SMC materials. Hybrid iron core (SMC and PM) machines are also excellent targets for SMC, because due to the permanent magnets the low permeability of the iron core is not a problem here. Also in the case of the machines having relatively large effective air-gap the stator iron permeability is not so critical. Also the iron cores of most of the linear motors and actuators are difficult to laminate and after to wind, so they could be manufactured from SMC.

Beside the electrical machines SMC can be used for manufacturing several other devices as: inductor cores, power factor chokes, flyback transformers, loudspeakers, ignition transformers for automobiles, power steering torque sensors, etc. [4].

4. TFM HAVING SMC IRON CORE

The transverse flux machines (TFM) are a quite new topology of electrical machines being developed and named by Weh in the '80s [7]. This electrical machine has a special topology, which usually includes the flux concentration principle for the permanent magnets excited structures.

The basic TFM has a stator phase winding of a ring type, which produces a homopolar MMF distribution. In the air-gap the homopolar MMF is modulated by a pattern of stator poles to interact with a heteropolar pattern of permanent magnets placed on the rotor.

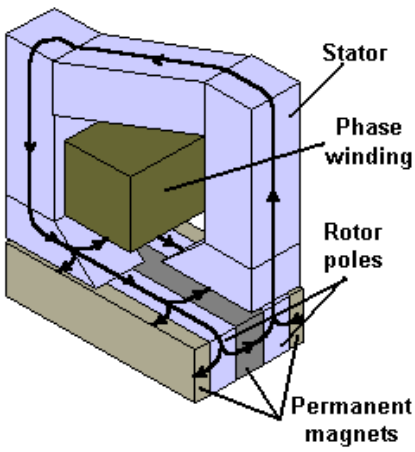

Fig. 5. The flux pattern in a TFM

In Fig. 5 one a section of one phase of the basic TFM is shown, in a linear arrangement for a better understanding. As it can be seen the flux line pattern is fundamentally three-dimensional. Since this machine allows the pole number to be increased without reducing the MMF per pole, it is capable of producing power densities much larger than the conventional machines [1].

This was possible due to the innovative design of the flux path for a TFM combined with the use of new, high energy, permanent magnets. The achievable power to total machine weight ratios for active rotor TFM range from 0.5÷2 kW/kg compared to 0.25÷0.8 kW/kg for conventional machines.

The high torque/volume values specific for TFM has several reasons. Its flux path is true three-dimensional, as shown in Fig. 5, that allows a MMF maximisation without reducing the iron path and a short, more efficient iron core path compared to conventional machines, which permits higher air-gap flux densities. Other advantages of the TFM structure are the possibility to use a flux concentration topology for permanent magnet excitation and much smaller pole pitch than in a conventional machine.

One of the most important disadvantages of the TFM is its very complex construction, with a three-dimensional field pattern.

It is expected that the TF machine will occupy an important segment of the low-speed, high torque, variable-speed drive market.

To exemplify how SMC can be used for the iron core of electrical machines a single-sided TFM with flux concentrating rotor topology built up at RWTH Aachen will be presented [8]. The main rated data of the TFM are: output power 25 kW, speed 600 1/min, torque 400 Nm, phase voltage 205 V and phase current 70 A.

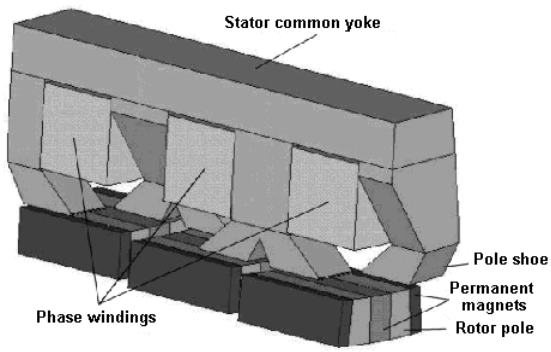

Fig. 6. A detail of a TFM configuration [8]

A detail of the three phase machine's structure is given in Fig. 6. The exterior rotor has SMC flux concentrating poles placed between the rare earth permanent magnets, which are magnetised with alternating polarity in circumferential direction. The active rotor parts are glued on a nonmagnetic steel ring.

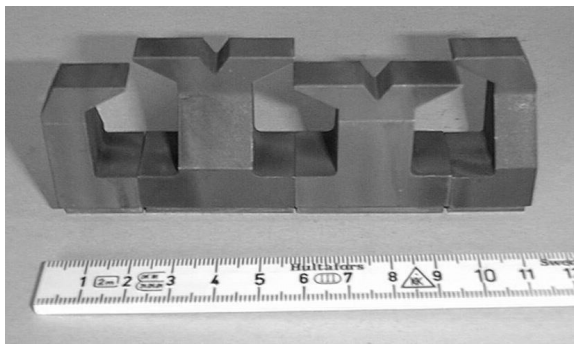

Fig. 7. Stator pole arrangement in a TFM [8]

The poles of the interior stator, made of SMC are placed circumferentially at a distance of double pole pitch. The two pole shoes of one stator phase pole pair are shifted against each other with a pole pitch, Fig. 7.

As it can be seen, the phases, partial coupled magnetically, have no axial space between them. In Fig. 8 some electroerosion machined SMC components of the TFM are given.

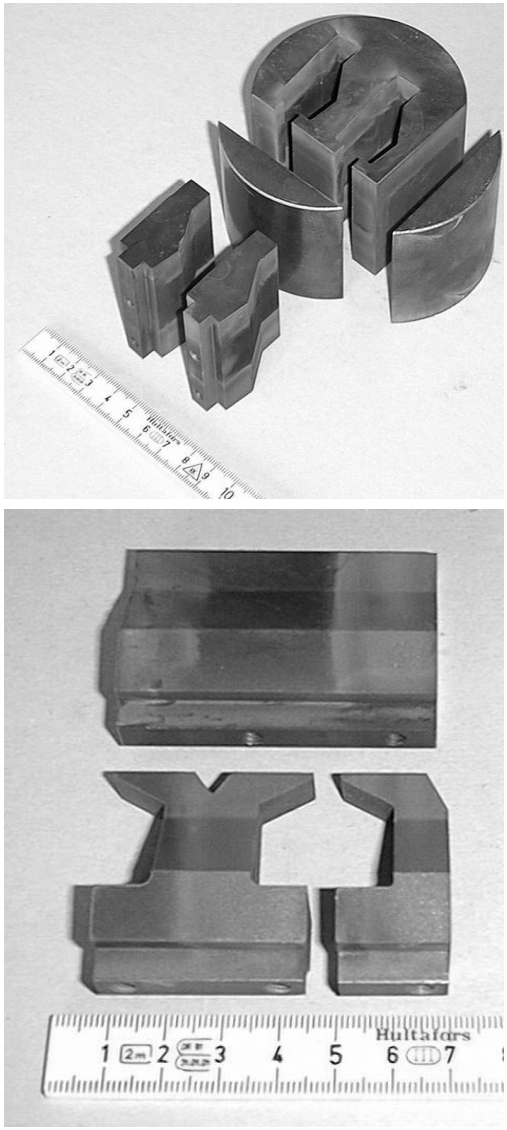

Fig. 8. Technological aspects of manufacturing the iron core components of a TFM [8]

All the performances of the TFM described in detail in [8] emphasise the usefulness of SMC components for this type of machine having three-dimensional magnetic flux paths.

5. ACKNOWLEDGEMENTS

The work was possible due to the support given by the Romanian Academy, respectively the National Council of Scientific Research in Higher Education (Romanian Ministry of Education and Research) to the authors.

6. REFERENCES

[1] Viorel, I.A, Henneberger, G., Blissenbach, R. and Löwenstein, L., "*Transverse flux machines. Their behaviour, design, control and applications*," Mediamira Publishers, Cluj (Romania), 2003.

[2] Dickinson, P.G., "*Using Iron Powder to Enhance the Performance and Reduce the Enviromental Cost of Motor Production*," Post Graduate Conference PGC '2001, University of Newcastle, 2001.

[3] Höganäs AB, "*Somaloy™ 500*," Höganäs (Sweden), 2001.

[4] Jack, A., "*The Possibilities for Insulated Iron Powder as a New Material for Electromagnetic Components*," presentation at the IEEE Joint German IAS/PELS/IES Chapter Meeting, Regensburg (Germany), 2003.

[5] Guo, Y.G., Zhu, J.G., Watterson, P.A. and Wu, W., "Comparative Study of 3D Flux Electrical Machines with Soft Magnetic Composite Cores," in: *Proceedings of the 2002 IEEE Industry Application Conference (37th Annual IAS Meeting)*, Pittsburgh (USA), 2002.

[6] Jansson, P., "Application of Soft Magnetic Composite Materials to Electric Motors," in *Proceedings of the 10th International Power Electronics and Motion Control Conference (PEMC '2002)*, Cavtat & Dubrovnik (Croatia), on CD: SSSB-05.pdf, 2002.

[7] Weh, H. and Jiang, J., "Berechnungs-grundlagen für Transversalfluss-maschinen", *Archiv für Elektrotechnik*, vol. 71, pp. 187-198, 1988.

[8] Blissenbach, R., "*Entwicklung von permanenterregten Transversalfluss-maschinen hoher Drehmomentdichte fur Traktionsantriebe*," Ph.D. Thesis, RWTH Aachen (Germany), 2002.